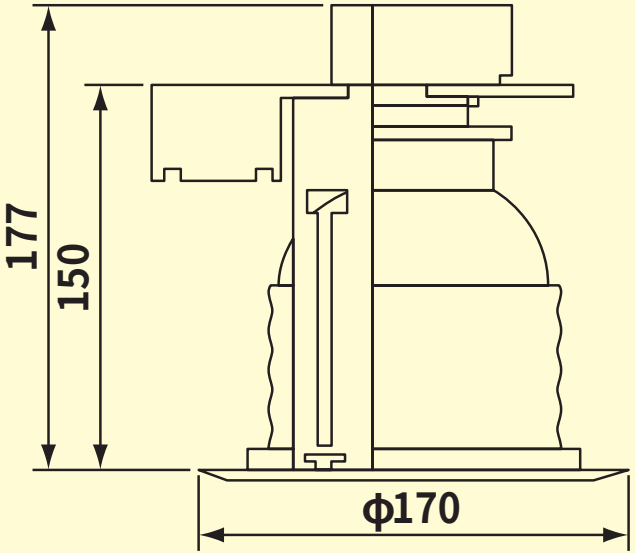FD2103A　FD2104A