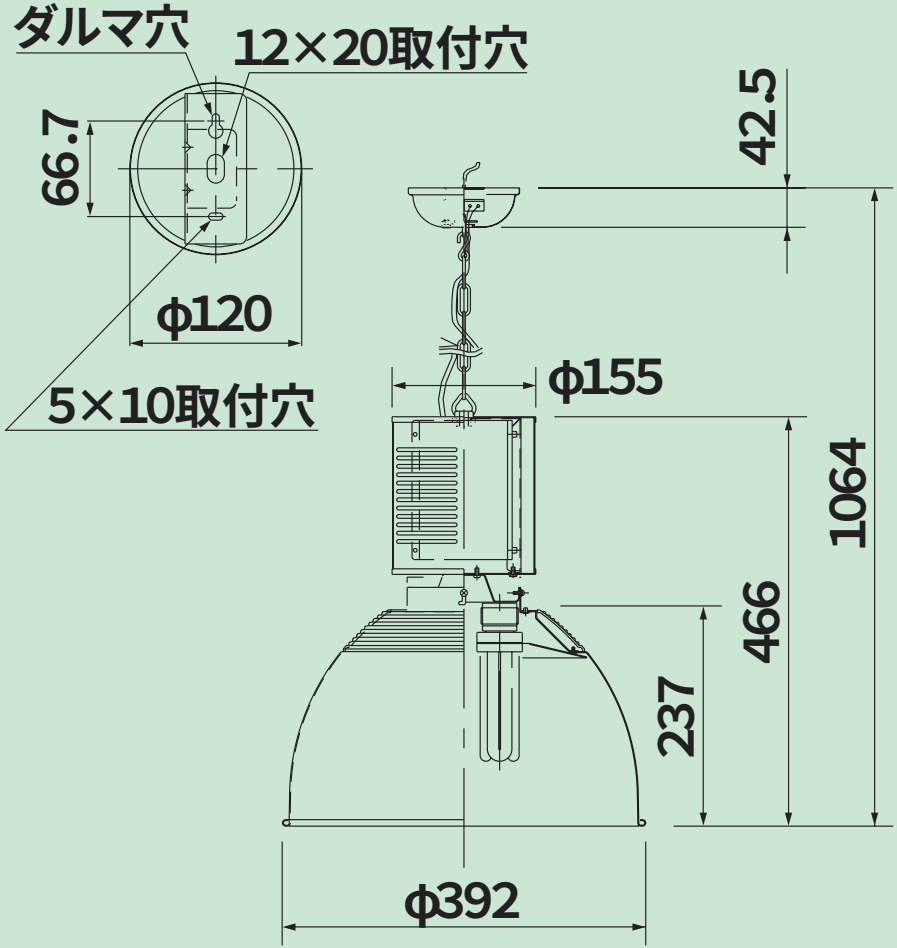HP4302
HP4402