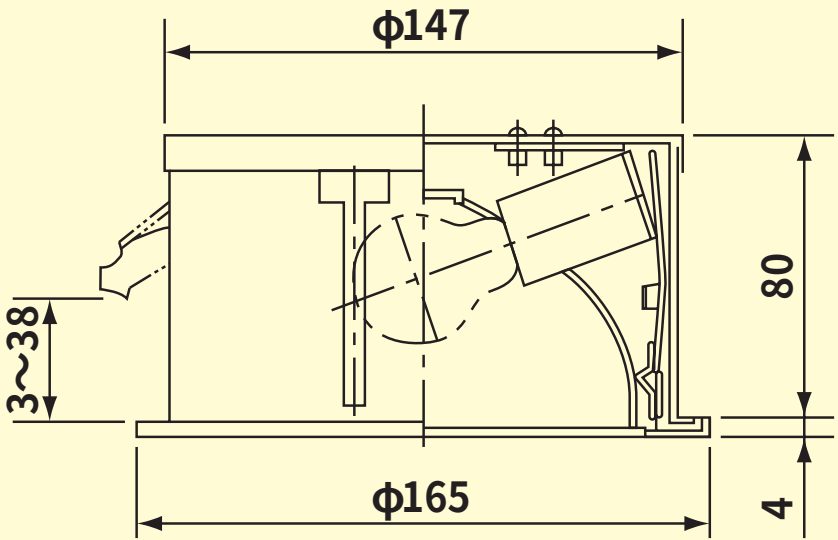LDS6611 • LDS6612